MILLER'S

Presentation Furniture

Classroom Series - 43.5x34

Data Sheet

MILLER'S
Presentation Furniture

Top

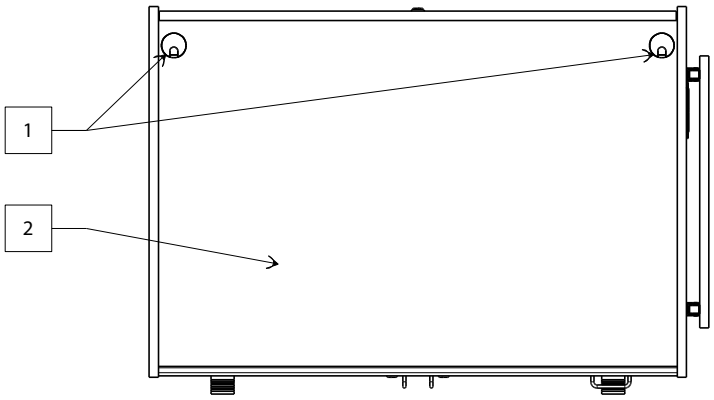

Front

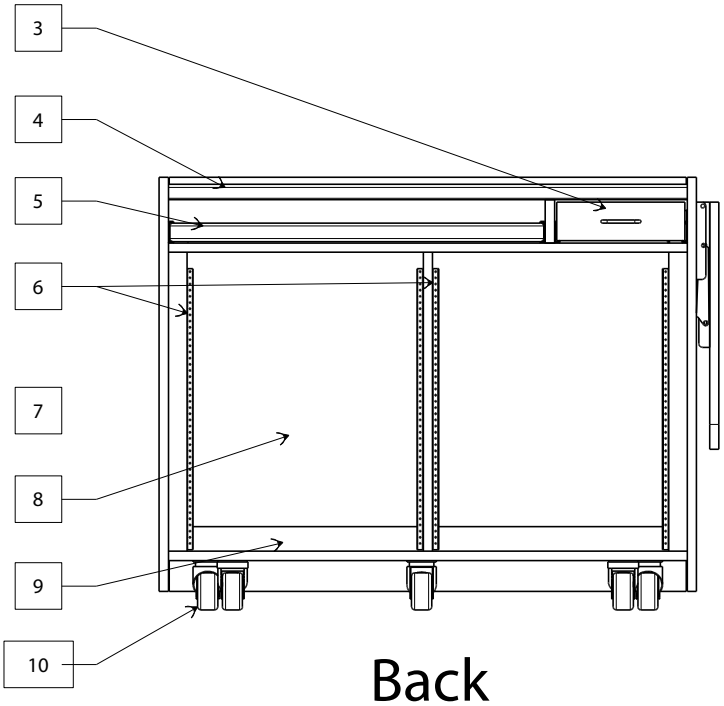

Back

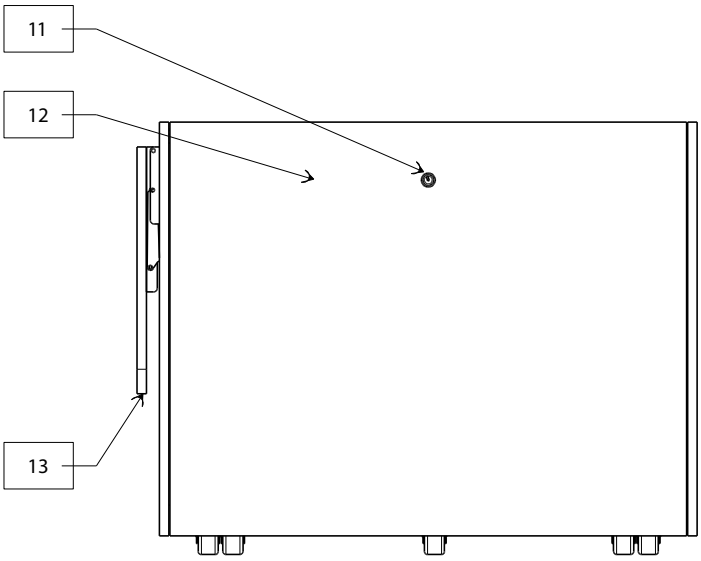

Dimensions
43.5" W X 30" D X 35" H
Rack space: 13 Front/Rear

Technical Specifications	
1	Cable grommets
2	Flat worksurface
3	Utility drawer
4	Hardwood pencil lip
5	Slide out keyboard/mouse drawer
6	Installed front & rear rack rails - 13RU's
7	*Not shown* Hinged locking door
8	Open bay
9	Structural support ring
10	Optional casters or leveling legs
11	Lock
12	Removable access panel
13	Flip-up side shelf on presenters right

MILLER'S
Presentation Furniture

Side

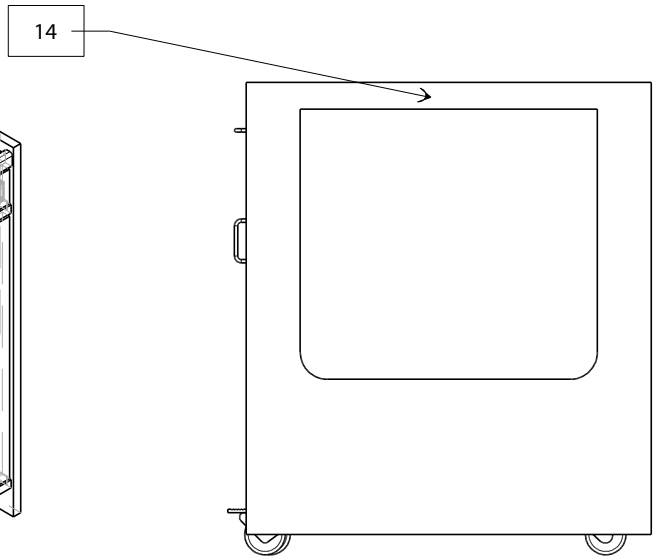

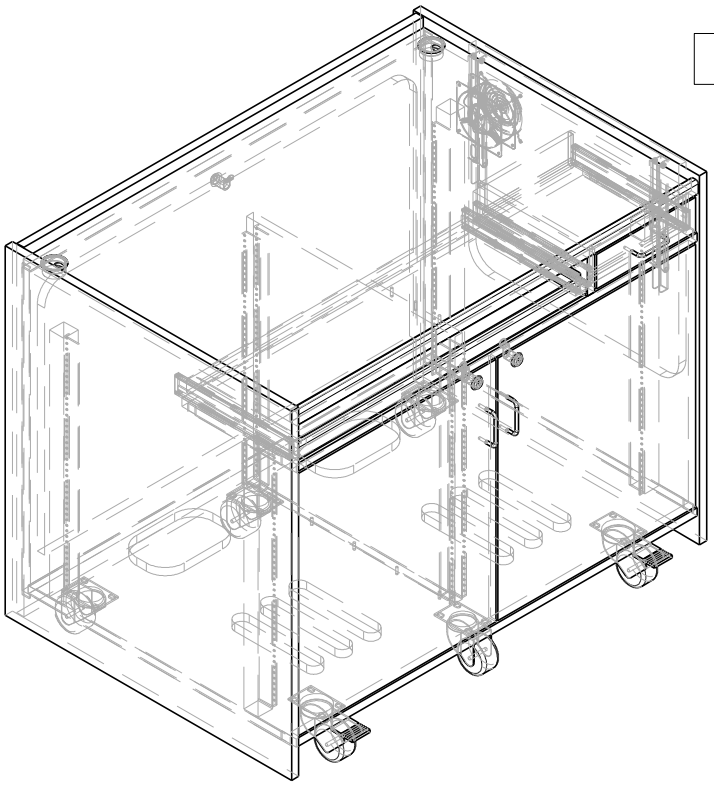

Isometric View
(with hidden lines shown)

Bottom

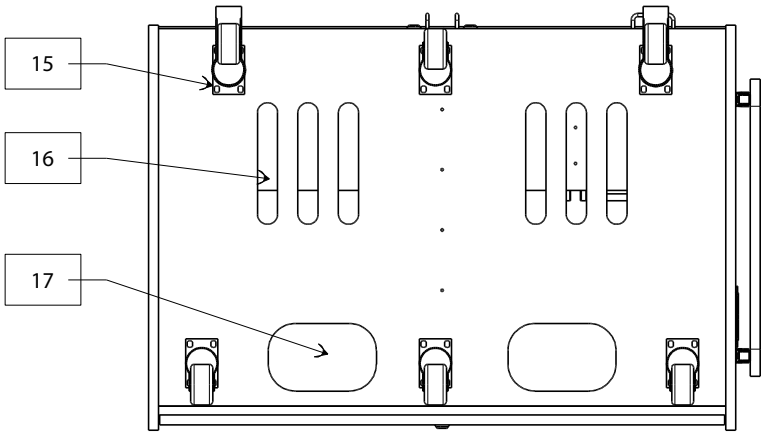

Technical Specifications	
14	Flat profile top design
15	Heavy duty casters - foot locks
16	Convection cooling vents
17	Large wire pass through